# WESLO®
# pursuit E 25

Model No. WLEX0996.0
Serial No. _____

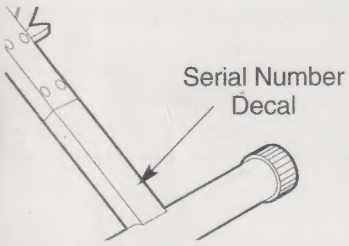


## USER'S MANUAL

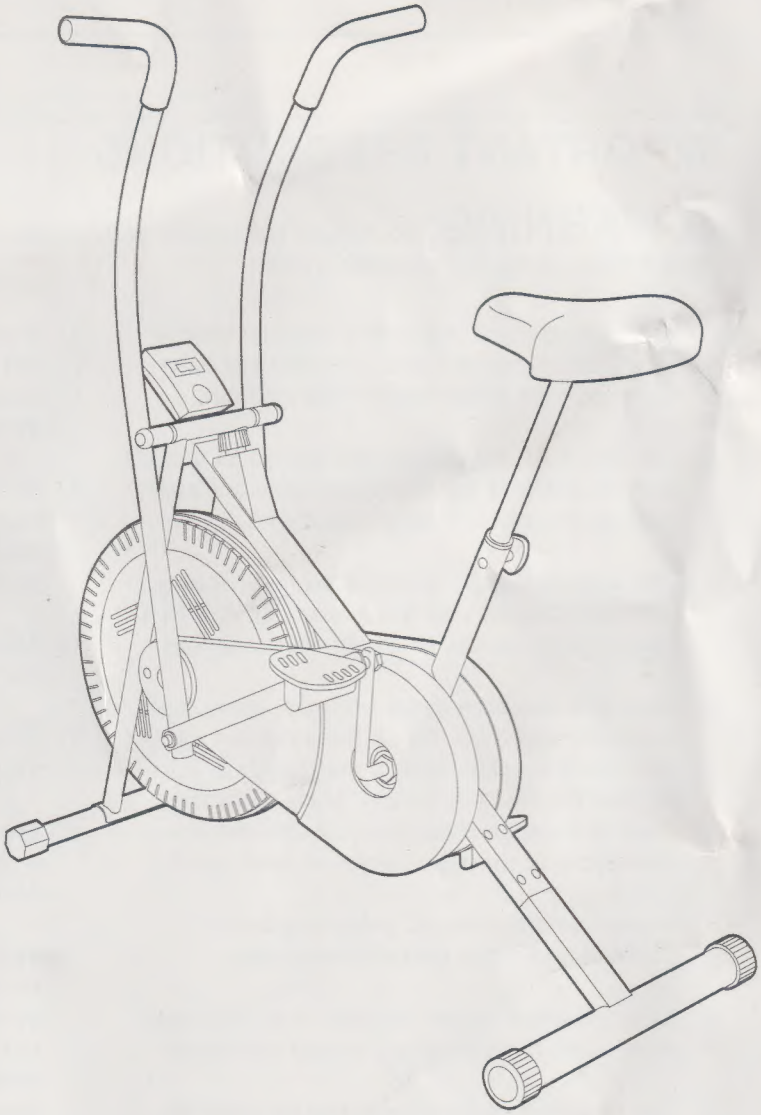

## QUESTIONS?

As a manufacturer, we are committed to providing complete customer satisfaction. If you have questions, or if a part is damaged or missing, PLEASE CONTACT OUR CUSTOMER SERVICE DEPARTMENT DIRECTLY.

CALL TOLL-FREE:
**1-866-699-3756**
Mon.–Fri., 6 a.m.–6 p.m. MST
(closed on holidays)

ON THE WEB:
www.wesloservice.com

## ⚠ CAUTION

Read all precautions and instructions in this manual before using this equipment. Keep this manual for future reference.


Visit our website at

www.weslo.com

*new products, prizes, fitness tips, and much more!*

# TABLE OF CONTENTS

IMPORTANT PRECAUTIONS . . . . . 2
BEFORE YOU BEGIN . . . . . 3
ASSEMBLY . . . . . 4
HOW TO USE THE EXERCISE CYCLE . . . . . 6
MAINTENANCE AND TROUBLESHOOTING . . . . . 8
CONDITIONING GUIDELINES . . . . . 9
PART LIST . . . . . 10
EXPLODED DRAWING . . . . . 11
HOW TO ORDER REPLACEMENT PARTS . . . . . Back Cover
LIMITED WARRANTY . . . . . Back Cover

# IMPORTANT PRECAUTIONS

**⚠ WARNING: To reduce the risk of serious injury, read the following important precautions before using the exercise cycle.**

1. Read all instructions in this manual before using the exercise cycle. Use the exercise cycle only as described in this manual.
2. It is the responsibility of the owner to ensure that all users of the exercise cycle are adequately informed of all precautions.
3. The exercise cycle is intended for in-home use only. Do not use the exercise cycle in a commercial, rental, or institutional setting.
4. Keep the exercise cycle indoors, away from moisture and dust. Place the exercise cycle on a level surface, with a mat beneath it to protect the floor or carpet. Make sure that there is enough clearance around the exercise cycle to mount, dismount, and use it. .
5. Inspect and tighten all parts regularly. Replace any worn parts immediately.
6. Keep children under the age of 12 and pets away from the exercise cycle at all times.
7. The exercise cycle should not be used by persons weighing more than 250 pounds.
8. Wear appropriate clothing when exercising; do not wear loose clothing that could become caught on the exercise cycle. Always wear athletic shoes for foot protection.
9. When adjusting the seat, insert the seat pin into one of the holes in the seat post (see the drawing on page 5). Do not insert the seat knob under the seat post.
10. Always keep your back straight when using the exercise cycle; do not arch your back.
11. If you feel pain or dizziness while exercising, stop immediately and begin cooling down.
12. The exercise cycle does not have a free wheel; the pedals and the handlebars will continue to move until the flywheel stops.
13. The decal shown on page 3 has been placed on the exercise cycle. If the decal is missing or illegible, call the toll-free telephone number on the front cover of this manual and order a free replacement decal. Apply the decal in the location shown.

**⚠ WARNING: Before beginning this or any exercise program, consult your physician. This is especially important for persons over the age of 35 or persons with pre-existing health problems. Read all instructions before using. ICON assumes no responsibility for personal injury or property damage sustained by or through the use of this product.**

# BEFORE YOU BEGIN

Thank you for selecting the new WESLO PURSUIT® E 25 exercise cycle. The PURSUIT E 25 exercise cycle blends advanced engineering with contemporary styling to provide you with effective, low-impact workouts in the convenience and privacy of your home.

**For your benefit, read this manual carefully before you use the exercise cycle.** If you have questions after reading this manual, please see the front cover of this manual. To help us assist you, note the product model number and serial number before contacting us.

The model number is WLEX0996.0. The serial number can be found on a decal attached to the exercise cycle (see the front cover of this manual for the location of the decal).

**To avoid a registration fee for any service needed under warranty, you must register the exercise cycle at www.wesloservice.com/registration.**

Before reading further, please look at the drawing below and familiarize yourself with the labeled parts.

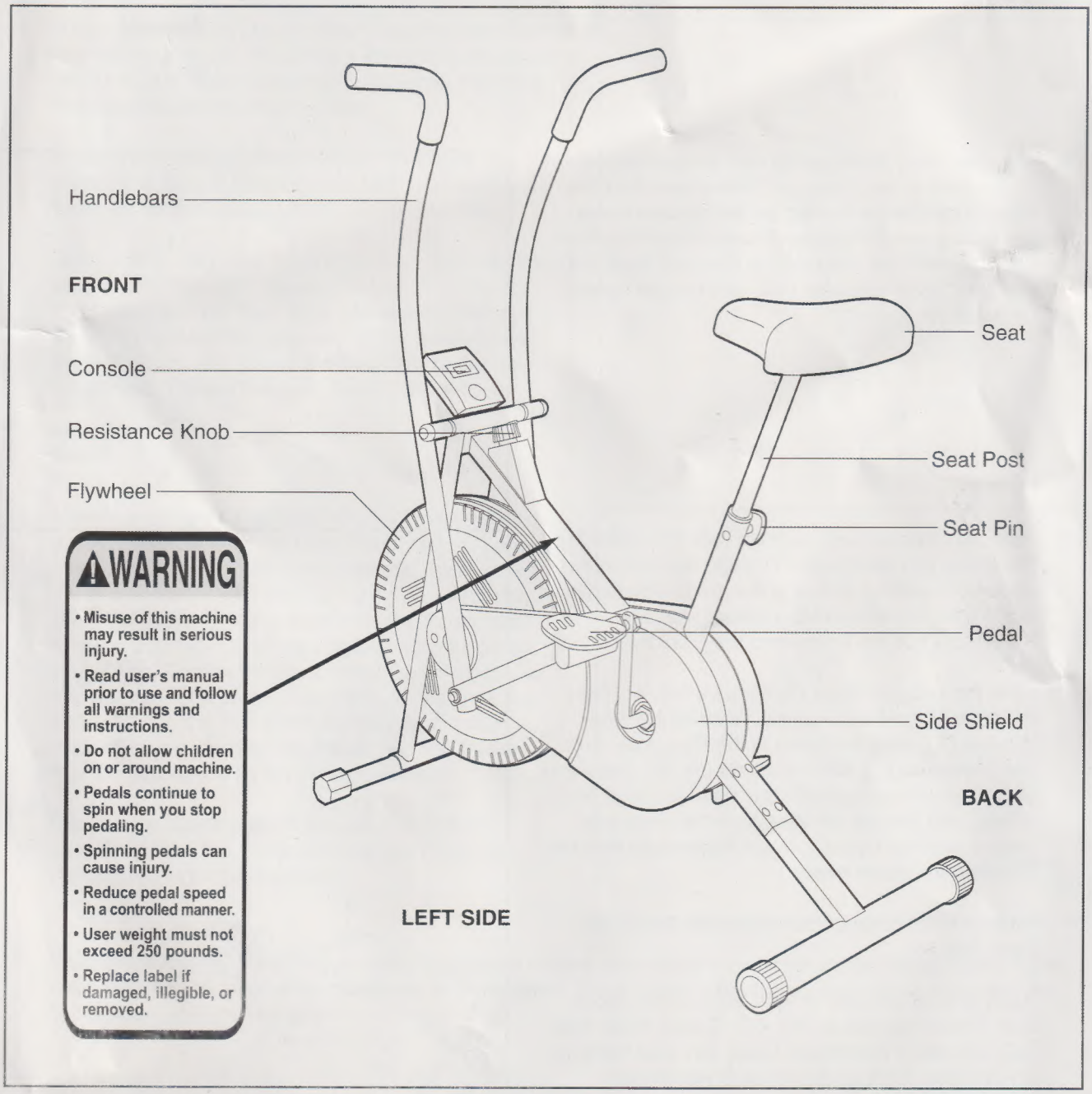

# ASSEMBLY

Place all parts of the exercise cycle in a cleared area and remove the packing materials. Do not dispose of the packing materials until assembly is completed. **Assembly requires a phillips screwdriver and an adjustable wrench . A small amount of liquid soap is also required.**

1. Refer to the inset drawing. Remove the Shipping Insert (54) from the Frame (1) and discard it.

   Turn the Rear Stabilizer (2) so that the slot faces downward, and insert the Rear Stabilizer into the Frame (1). Attach the Rear Stabilizer with four M5 x 10mm Machine Screws (32).

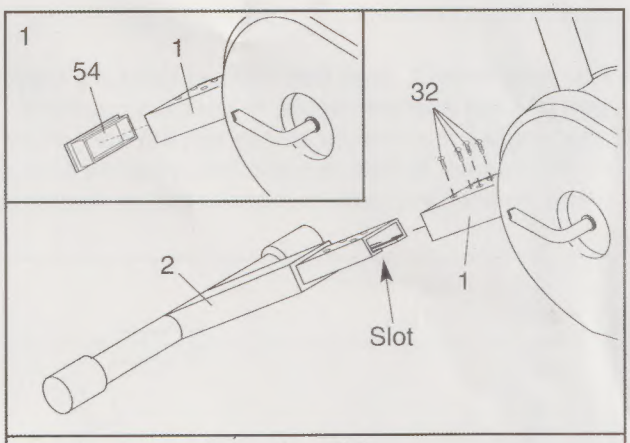


2. Align the Front Stabilizer (5) with the saddle bracket on the front of the Frame (1). **Make sure that the Front Stabilizer is turned so the square holes are facing away from the Frame.** Attach the Front Stabilizer with two M8 x 40mm Carriage Bolts (18), two M8 Curved Washers (14), and two M8 Nylon Locknuts (9).

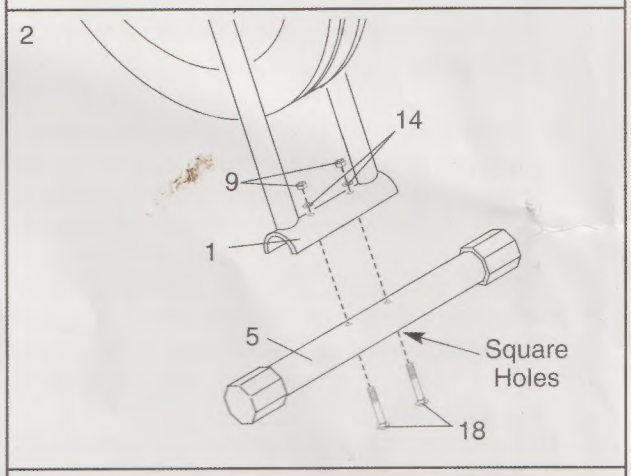


3. Remove all parts from the Pivot Axle (3). Insert the Pivot Axle into the Frame (1). Align the hole in the center of the Pivot Axle with the hole in the center of the Frame. Tighten an M5 x 10mm Machine Screw (32) into the Frame and the Pivot Axle.

   Slide the Left and Right Handlebars (40, 41) onto the ends of the Pivot Axle (3). Slide an M8 Flat Washer (38) onto each end of the Pivot Axle, and then thread an M8 Nylon Locknut (9) onto each end of the Pivot Axle. Tighten each Nylon Locknut until at least two threads on the end of the Pivot Axle extend past the Nylon Locknut. **Make sure that the Handlebars move freely**.

   Press a Pivot Endcap (50) onto each end of the Pivot Axle (3).

   Apply a small amount of liquid soap to the upper end of each Handlebar (40, 41). Slide a Foam Grip (42) onto each Handlebar. Make sure that there is a Handlebar Endcap (55) in each Handlebar.

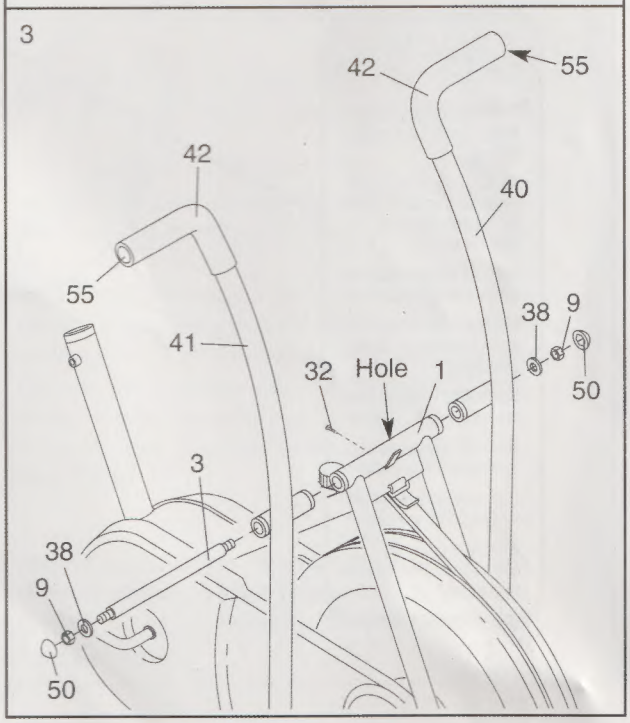

4. The Console (7) requires one "AAA" battery (not included); an alkaline battery is recommended. Refer to the inset drawing. Remove the battery door from the back of the Console and insert the battery into the Console. **Make sure that the battery is oriented as shown by the diagram inside the battery compartment.** Then, reattach the battery door.

   Next, plug the Reed Switch Wire (28) fully into the socket on the back of the Console (7).

   Slide the Console onto the console plate. Note: The Console is held by friction; it does not snap into place.

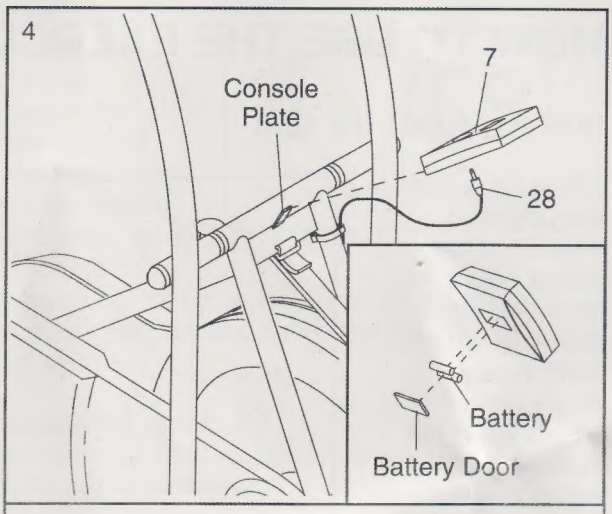


5. Attach the Seat (11) to the Seat Post (10) with four M8 Nylon Locknuts (9) and four M8 Spring Washers (8). Note: The Nylon Locknuts and Spring Washers may be pre-attached to the Seat.

   Press the Frame Bushing (4) into the Frame (1). (Note: The Frame Bushing may be pre-assembled.) Next, insert the Seat Post (10) into the Frame.

   Align one of the holes in the Seat Post (10) with the hole in the Frame (1). Insert the Seat Pin (31) into the Frame and the Seat Post. **Make sure that the Seat Pin is inserted into one of the holes in the Seat Post; do not insert the Seat Pin under the Seat Post.** Tighten the Seat Pin into the Frame.

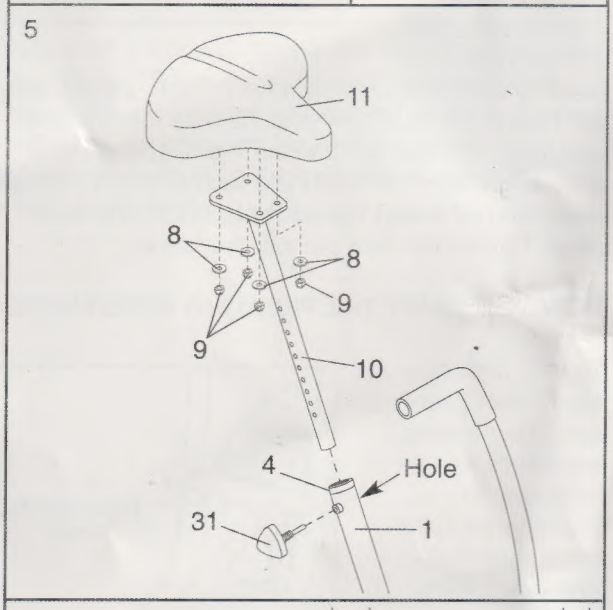


6. Identify the Right Pedal (22), which is marked with an "R." Remove only the Right Pedal Nut (47) and the Pedal Bushing (46) from the Pedal. Next, insert the shaft of the Pedal into the right Pedal Arm (49). Slide the Pedal Bushing back onto the Pedal, and position the Pedal Bushing so that it slides into the Pedal Arm. Tighten the shaft of the Pedal *clockwise* into the right arm of the Crank (20) as firmly as possible. Tighten the Pedal Nut *clockwise* onto the Pedal. **Make sure that the Pedal and the Pedal Nut are tightened as firmly as possible.**

   Repeat this step to attach the Left Pedal (not shown), turning the Pedal and the Left Pedal Nut (not shown) *counterclockwise.*

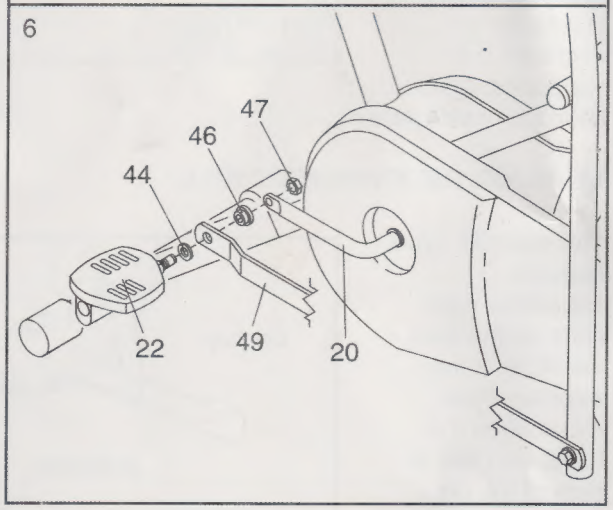


7. **Make sure that all parts are properly tightened before you use the exercise cycle. Note: Some hardware may be left over after assembly is completed.** Place a mat under the exercise cycle to protect the floor or carpet from damage.

# HOW TO USE THE EXERCISE CYCLE

## HOW TO ADJUST THE SEAT

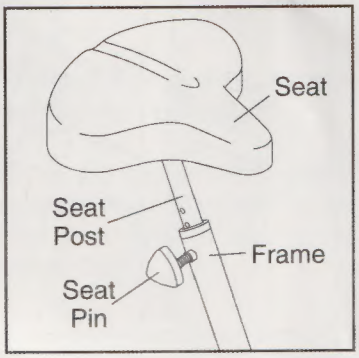


For effective exercise, the seat must be at the proper height. As you pedal, there should be a slight bend in your knees when the pedals are in the lowest position. To adjust the seat, first hold the seat and turn the seat pin counterclockwise to remove it. Next, align a different hole in the seat post with the hole in the frame, and insert the seat pin into the frame and the seat post. **Make sure to insert the seat pin into the seat post; do not insert the seat pin under the seat post.** Tighten the seat pin into the frame.

## HOW TO ADJUST THE PEDALING RESISTANCE

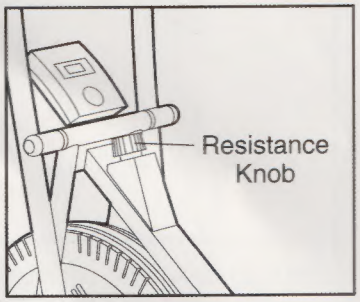


To vary the intensity of your exercise, the pedaling resistance can be adjusted. To increase the resistance, turn the resistance knob clockwise; to decrease the resistance, turn the knob counterclockwise.

## LEVELING THE EXERCISE CYCLE

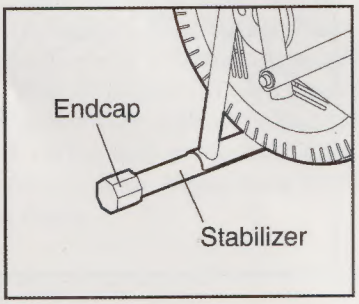


The exercise cycle features adjustable endcaps on the front stabilizer. If the exercise cycle rocks when it is used, turn one or both of the endcaps until the rocking motion is eliminated.

## BATTERY INSTALLATION

Before the console can be operated, one "AAA" battery must be installed. If you have not installed the battery, see assembly step 4 on page 5.

## DESCRIPTION OF THE CONSOLE

The console features five modes that provide instant exercise feedback during your workouts. The modes are described below.

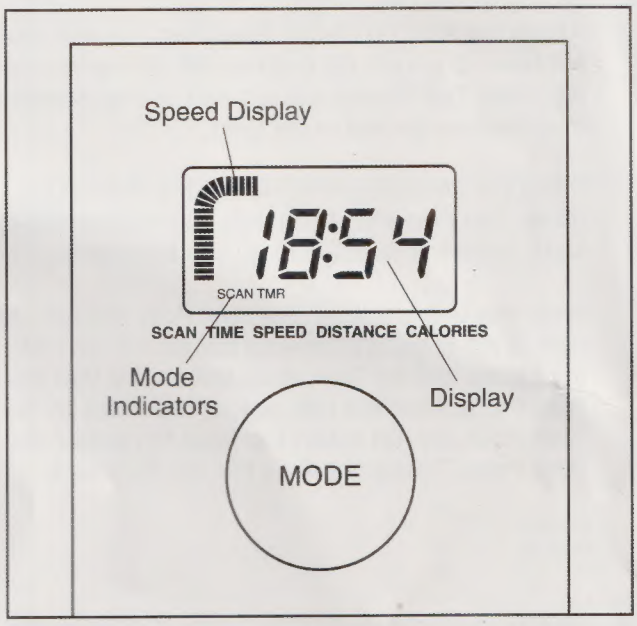


- Scan mode—Displays the speed, time, distance, and calories modes, for five seconds each, in a repeating cycle.
- Time mode—Displays the elapsed time. Note: If you stop pedaling for five seconds or longer, the time mode will pause and a stop symbol will appear in the upper right-hand corner of the display.
- Speed mode—Displays your pedaling speed, in miles per hour.
- Distance mode—Displays the total distance you have pedaled, in miles.
- Calories mode—Displays the approximate number of calories you have burned.

Note: The console also features a speed display. As you increase your pedaling speed, additional indicators will appear in the bar.

## HOW TO OPERATE THE CONSOLE

Note: If there is a piece of clear plastic on the face of the console, remove it before operating the console.

1. To turn on the power, press the mode button or simply begin pedaling. When the power is turned on, the entire display will appear for two seconds. The console will then be ready for operation.

2. Select one of the five modes:

**Scan mode—** When the power is turned on, the scan mode will automatically be selected. One mode indicator will show that the scan mode is selected, and a second mode indicator will show which mode is currently displayed. Note: If a different mode is selected, you can select the scan mode again by repeatedly pressing the mode button.

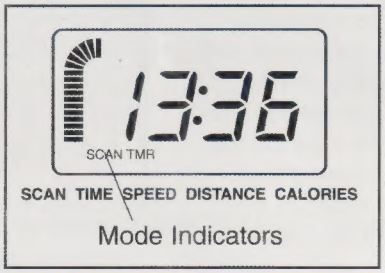


**Time, speed, distance, or calories mode—**To select one of these modes for continuous display, press the mode button repeatedly. The mode indicators will show which mode is selected. Make sure that the scan mode is not selected.

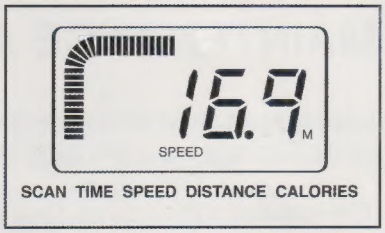


3. To reset the display, hold down the mode button for two seconds. After the display is reset, the scan mode will be selected.

4. To turn off the power, simply wait for about four minutes. **Note: The console has an "auto-off" feature. If the pedals are not moved and the mode button is not pressed for four minutes, the power will turn off automatically in order to conserve the battery.**

# MAINTENANCE AND TROUBLESHOOTING

Inspect and tighten all parts of the exercise cycle regularly. Replace any worn parts immediately.

The exercise cycle can be cleaned with a soft, damp cloth. Avoid spilling liquid on the console. Keep the console out of direct sunlight or the display may be damaged. Remove the battery when storing the exercise cycle.

### BATTERY REPLACEMENT

If the console does not function properly, the battery should be replaced. See assembly step 4 on page 5. In addition, make sure that the reed switch wire is plugged fully into the console.

### HOW TO TIGHTEN THE CRANK

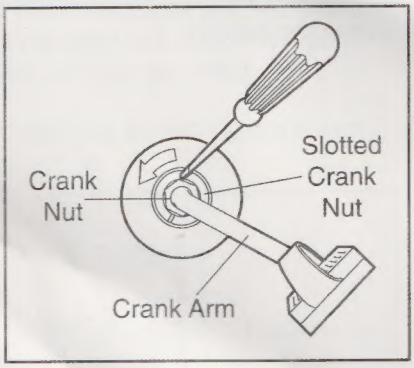


If the arms of the crank become loose, they should be tightened in order to prevent excessive wear. Loosen the crank nut on the left arm of the crank.
Place the end of a standard screwdriver in one of the slots in the slotted crank nut. Lightly tap the screwdriver with a hammer to turn the slotted crank nut counterclockwise until the arms are no longer loose. **Do not overtighten the slotted crank nut.** When the slotted crank nut is properly tightened, retighten the crank nut.

### HOW TO ADJUST THE RESISTANCE STRAP

If there is not enough pedaling resistance when the resistance knob is turned to the highest setting, the resistance strap may need to be adjusted. To adjust the resistance strap, first turn the resistance knob counterclockwise to the lowest setting. Next, locate the slotted tab on the front of the exercise cycle. Grip the longest part the resistance strap underneath the slotted tab and pull it towards the slot. When a little slack is created, pull the end of the resistance strap tight. Turn the crank for a moment to make sure that there is not too much resistance.

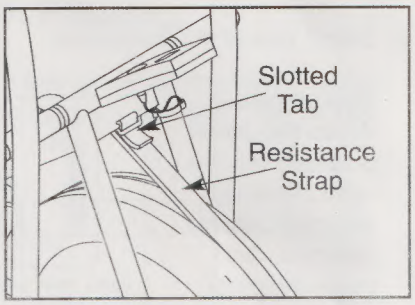


### HOW TO ADJUST THE CHAIN

The exercise cycle features a chain that must be kept properly adjusted. If the chain causes excessive noise or slips as you pedal, the chain should be adjusted.

To tighten the chain, loosen, but do not remove, the axle nuts on both sides of the flywheel. Pull the flywheel forward slightly. Make sure that the flywheel is straight and retighten the axle nuts.

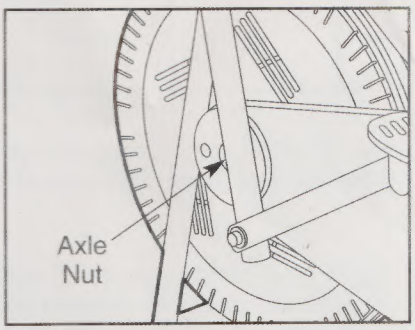

# CONDITIONING GUIDELINES

The following guidelines will help you to plan your exercise program. Remember that proper nutrition and adequate rest are essential for successful results.

**⚠ WARNING: Before beginning this or any exercise program, consult your physician. This is especially important for persons over the age of 35 or persons with pre-existing health problems.**

## EXERCISE INTENSITY

Whether your goal is to burn fat or to strengthen your cardiovascular system, the key to achieving the desired results is to exercise with the proper intensity. The proper intensity level can be found by using your heart rate as a guide. The chart below shows recommended heart rates for fat burning, maximum fat burning, and cardiovascular (aerobic) exercise.

| | | | | | | | |
|---|---|---|---|---|---|---|---|
| *165* | *155* | *145* | *140* | *130* | *125* | *115* | ♥ |
| *145* | *138* | *130* | *125* | *118* | *110* | *103* | ♥ |
| *125* | *120* | *115* | *110* | *105* | *95* | *90* | ♥ |
| *20* | *30* | *40* | *50* | *60* | *70* | *80* | |

To find the proper heart rate for you, first find your age at the bottom of the chart (ages are rounded off to the nearest ten years). Next, find the three numbers above your age. The three numbers are your "training zone." The lowest number is the recommended heart rate for fat burning, the middle number is the recommended heart rate for maximum fat burning, and the highest number is the recommended heart rate for aerobic exercise.

### Burning Fat

To burn fat effectively, you must exercise at a relatively low intensity level for a sustained period of time. During the first few minutes of exercise, your body uses easily accessible *carbohydrate* calories for energy. Only after the first few minutes of exercise does your body begin to use stored *fat* calories for energy. If your goal is to burn fat, adjust the intensity of your exercise until your heart rate is near the lowest number in your training zone as you exercise. For maximum fat burning, adjust the intensity of your exercise until your heart rate is near the middle number in your training zone as you exercise.

### Aerobic Exercise

If your goal is to strengthen your cardiovascular system, your exercise must be "aerobic." Aerobic exercise is activity that requires large amounts of oxygen for prolonged periods of time. This increases the demand on the heart to pump blood to the muscles, and on the lungs to oxygenate the blood. For aerobic exercise, adjust the intensity of your exercise until your heart rate is near the highest number in your training zone.

## HOW TO MEASURE YOUR HEART RATE

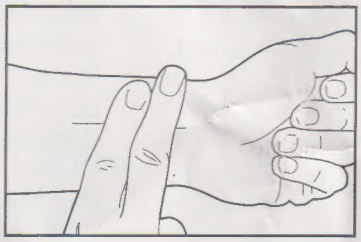

To measure your heart rate, first exercise for at least four minutes. Then, stop exercising and place two fingers on your wrist as shown. Take a six-second heartbeat count, and multiply the result by 10 to find your heart rate. For example, if your six-second heartbeat count is 14, your heart rate is 140 beats per minute. Note: A six-second count is used because your heart rate will drop rapidly when you stop exercising.

## WORKOUT GUIDELINES

Each workout should include the following three parts:

**A warm-up**, consisting of 5 to 10 minutes of stretching and light exercise (see SUGGESTED STRETCHES on page 13). A proper warm-up increases your body temperature, heart rate, and circulation in preparation for exercise.

**Training zone exercise**, consisting of 20 to 30 minutes of exercising with your heart rate in your training zone. Note: During the first few weeks of your exercise program, do not keep your heart rate in your training zone for longer than 20 minutes.

**A cool-down**, with 5 to 10 minutes of stretching. Cooling down will increase the flexibility of your muscles and will help to prevent post-exercise problems.

# PART LIST—Model No. WLEX0996.0

R0706A

| Key No. | Qty. | Description |
|---|---|---|
| 1 | 1 | Frame |
| 2 | 1 | Rear Stabilizer |
| 3 | 1 | Pivot Axle |
| 4 | 1 | Frame Bushing |
| 5 | 1 | Front Stabilizer |
| 6 | 2 | Front Stabilizer Endcap |
| 7 | 1 | Console |
| 8 | 4 | M8 Spring Washer |
| 9 | 10 | M8 Nylon Locknut |
| 10 | 1 | Seat Post |
| 11 | 1 | Seat |
| 12 | 1 | Right Side Shield |
| 13 | 2 | Bronze Bushing |
| 14 | 2 | M8 Curved Washer |
| 15 | 6 | M5 x 10mm Self-tapping Screw |
| 16 | 1 | Flywheel |
| 17 | 1 | Resistance Strap |
| 18 | 2 | M8 x 40mm Carriage Bolt |
| 19 | 1 | Crank Bearing Assembly |
| 20 | 1 | Crank |
| 21 | 1 | Left Pedal |
| 22 | 1 | Right Pedal |
| 23 | 1 | Chain |
| 24 | 1 | Resistance Cable/Knob |
| 25 | 4 | 7/16" Flat Washer |
| 26 | 1 | Flywheel Axle |
| 27 | 4 | 3/8" Axle Nut |
| 28 | 1 | Reed Switch/Wire |
| 29 | 2 | 3/8" Axle Nut |
| 30 | 1 | M5 x 15mm Screw |
| 31 | 1 | Seat Pin |
| 32 | 5 | M5 x 10mm Machine Screw |
| 33 | 2 | M8 Custom Flat Washer |
| 34 | 1 | Resistance Spring |
| 35 | 1 | Sprocket |
| 36 | 2 | M8 x 43mm Bolt |
| 37 | 2 | Pedal Arm Bushing |
| 38 | 4 | M8 Flat Washer |
| 39 | 2 | Round Endcap |
| 40 | 1 | Left Handlebar |
| 41 | 1 | Right Handlebar |
| 42 | 2 | Foam Grip |
| 43 | 6 | Pivot Bushing |
| 44 | 2 | 1/2" Flat Washer |
| 45 | 1 | Left Side Shield |
| 46 | 2 | Pedal Bushing |
| 47 | 1 | Right Pedal Nut |
| 48 | 1 | Left Pedal Nut |
| 49 | 2 | Pedal Arm |
| 50 | 2 | Pivot Endcap |
| 51 | 2 | M5 Flat Washer |
| 52 | 1 | Wire Clip |
| 53 | 1 | Resistance Control Housing |
| 54 | 1 | Shipping Insert |
| 55 | 2 | Handlebar Endcap |
| # | 1 | User's Manual |
| # | 1 | 13mm/15mm Multi-purpose Tool |
| # | 1 | 13mm/19mm Multi-purpose Tool |

Note: "#" refers to a non-illustrated part. Specifications are subject to change without notice. See the back cover of this manual for information about ordering replacement parts.

# EXPLODED DRAWING—Model No. WLEX0996.0

R0706A

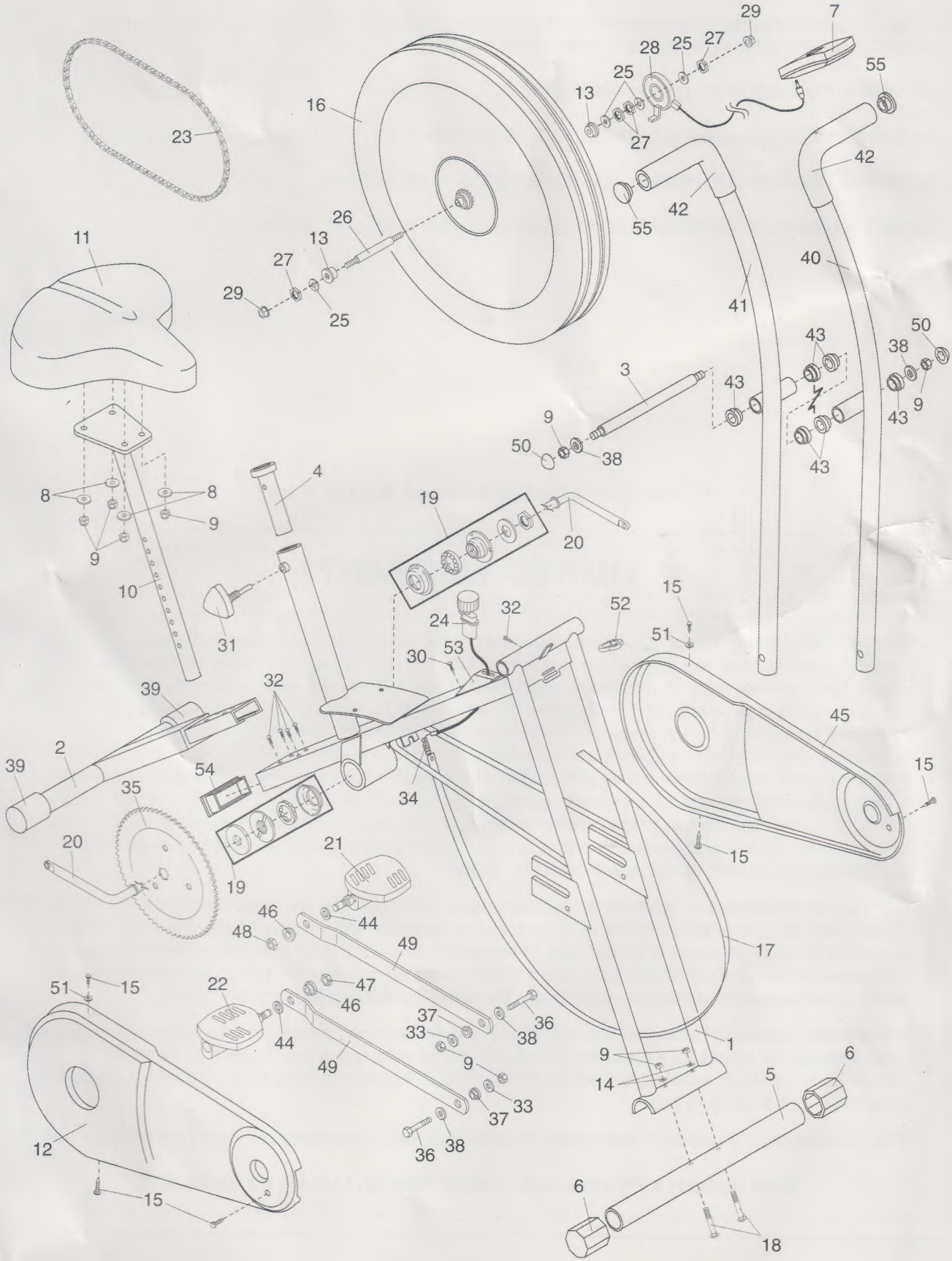

# HOW TO ORDER REPLACEMENT PARTS

To order replacement parts, please see the front cover of this manual. To help us assist you, please be prepared to give the following information when contacting us:

- the MODEL NUMBER of the product (WLEX0996.0)
- the NAME of the product (WESLO PURSUIT® E 25 exercise cycle)
- the SERIAL NUMBER of the product (see the front cover of this manual)
- the KEY NUMBER and DESCRIPTION of the part(s) (see the PART LIST on page 10)

WESLO is a registered trademark of ICON IP, Inc.

## LIMITED WARRANTY

ICON Health & Fitness, Inc. (ICON) warrants this product to be free from defects in workmanship and material, under normal use and service conditions, for a period of ninety (90) days from the date of purchase. This warranty extends only to the original purchaser. ICON's obligation under this warranty is limited to replacing or repairing, at ICON's option, the product through one of its authorized service centers. All repairs for which warranty claims are made must be pre-authorized by ICON. If the product is shipped to a service center, freight charges to and from the service center will be the customer's responsibility. For in-home service, the customer will be responsible for a minimal trip charge. This warranty does not extend to any product or damage to a product caused by or attributable to freight damage, abuse, misuse, improper or abnormal usage or repairs not provided by an ICON authorized service center; products used for commercial or rental purposes; or products used as store display models. No other warranty beyond that specifically set forth above is authorized by ICON.

ICON is not responsible or liable for indirect, special or consequential damages arising out of or in connection with the use or performance of the product or damages with respect to any economic loss, loss of property, loss of revenues or profits, loss of enjoyment or use, costs of removal or installation or other consequential damages of whatsoever nature. Some states do not allow the exclusion or limitation of incidental or consequential damages. Accordingly, the above limitation may not apply to you.

The warranty extended hereunder is in lieu of any and all other warranties and any implied warranties of merchantability or fitness for a particular purpose is limited in its scope and duration to the terms set forth herein. Some states do not allow limitations on how long an implied warranty lasts. Accordingly, the above limitation may not apply to you.

This warranty gives you specific legal rights. You may also have other rights which vary from state to state.

**ICON HEALTH & FITNESS, INC., 1500 S. 1000 W., LOGAN, UT 84321-9813**

Part No. 244563 R0706A

Printed in China © 2006 ICON IP, Inc.